PAKISTAN NAVY ENGINEERING COLLEGE, NATIONAL UNIVERSITY OF SCIENCES AND TECHNOLOGY, KARACHI

PNEC NUST

PROJECT REPORT

Square Wave Generator of Variable Frequency Using NE555 Timer (Astable Mode)

ELECTRONIC CIRCUIT DESIGN(EE-313)

Name: ARHAM JAFFER, AMIR REHMAN & ABDUL GHANI

CMS-ID: EE-1649, EE-1637 & EE-1676

Class: EE-B2

Semester: 5TH

SUBMITTED TO : MAM FARHA PARVEEN

DEPARTMENT OF ELECTRONICS & POWER ENGINEERING

TABLE OF Contents:

OBJECTIVE:..... 3
EQUIPMENT / COMPONENTS: 3
DESCRIPTION: 3
CALCULATIONS:..... 5
OBSERVATION:..... 6
RESULTS: 6
CIRCUIT DESIGN, SIMULATION, AND VERO BOARD IMPLEMENTATION..... 7

OBJECTIVE:

To design and simulate a **variable-frequency square wave generator** using the NE555 timer IC in Astable mode.
A potentiometer is used to adjust the oscillation frequency.
An LED is connected at the output to **visually verify** the generated waveform.

EQUIPMENT / COMPONENTS:

Component	Value / Specification	Purpose / Notes
NE555 Timer IC	DIP-8	Main IC for generating square wave
Potentiometer R2	5kΩ	Variable resistor to adjust frequency
Resistor R1	10kΩ	Sets charge time with R2
Capacitor C1	147µF (100µF ∥ 47µF)	Timing capacitor for square wave
Control Capacitor	0.1 µF	Noise filter at Pin 5
LED	Red	Visual output indicator
LED Series Resistor	330 Ω	Limits current through LED
Vero board	-	For permanent circuit assembly
Connecting wires	-	To connect components
DC Power Supply	5–12V	Power source for the circuit
Diodes	1N4148 (×2)	Shape waveform/avoid reverse current

DESCRIPTION:

The NE555 timer is configured in **astable multivibrator mode**, which means it continuously generates square waves without any external triggering.

Working Process:

1. **Charging Phase:**

   - Capacitor C1 charges through **R1 + R2**.
   - Voltage rises from **1/3 Vcc to 2/3 Vcc**.
   - Output at Pin 3 becomes **HIGH** → LED turns ON.

2. **Discharging Phase:**

   - At 2/3 Vcc, internal transistor turns ON.
   - C1 discharges through **R2 only**.
   - Output goes **LOW** → LED turns OFF.

3. **Frequency Control:**

   - Changing the potentiometer R2 changes:
     - Charging time
     - Discharging time
     - Overall frequency

   Therefore, the output frequency becomes **variable**.

4. **Noise Prevention:**

   - A **0.1 µF capacitor** is connected to Pin 5 to ensure stable operation and prevent false triggering.

Why LED Blinking?

The LED is only used as **visual proof** that the circuit is generating a square wave.
At low frequencies, the LED visibly blinks.
At high frequencies, the blink becomes too fast to see and appears ON continuously.

Why LED does NOT blink when the potentiometer is at zero?

When Potentiometer (R2) is rotated to **minimum (0Ω)**:

- The time period becomes very short.
- LED ON time ≈ 0.5 sec
- LED OFF time ≈ 0.5 sec

This blink is **too fast for the naked eye**, so the LED appears continuously ON .

CALCULATIONS:

Formula for Astable mode:

T=0.693*(R1+2R2)*C1

Given:

- R1=10 kΩ
- R2=5 kΩ
- C1=147 μF

At maximum R2 (5 kΩ):

T=0.693(10,000+2×5,000)(147×10^-6)

T=0.693(20,000)(147×10^−6)

T=2.038seconds

So,

- **High time ≈ 1.02 sec**
- **Low time ≈ 1.02 sec**

At minimum R2 (0 Ω):

T=0.693(10,000)(147×10^−6)

T≈1.02seconds

OBSERVATION:

- At maximum R2, the LED clearly blinks at ~1 second ON and 1 second OFF.
- At minimum R2, blinking becomes fast and is **no longer seen by the naked eye**, proving that the frequency increases.
- Proteus simulation confirmed:
    - Square wave at Pin 3
    - Charging/discharging waveform at capacitor
    - Frequency variation with potentiometer
    - LED changes brightness based on frequency

RESULTS:

- A **variable-frequency square wave generator** using the NE555 timer was successfully designed.
- Frequency was effectively controlled using a **5 kΩ potentiometer**.
- The circuit produced a stable and clean square wave due to the **0.1 µF noise filter capacitor**.
- LED provided a clear visual indication of waveform changes.
- The design is reliable and suitable for:
    - Clock generation
    - Pulse generation
    - LED drivers
    - Timing circuits
    - Digital signal testing

Circuit Design, Simulation, and Vero Board Implementation

Schematic:

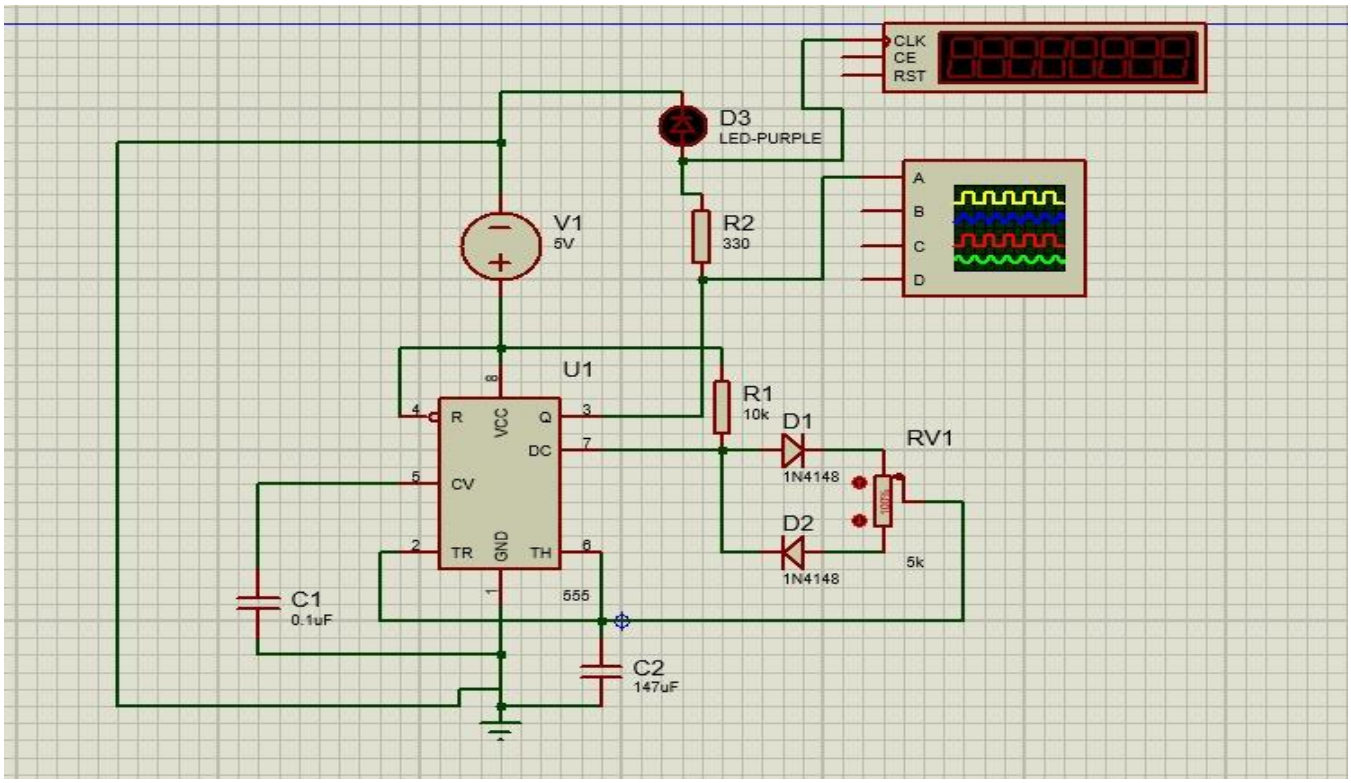

Simulation Output:

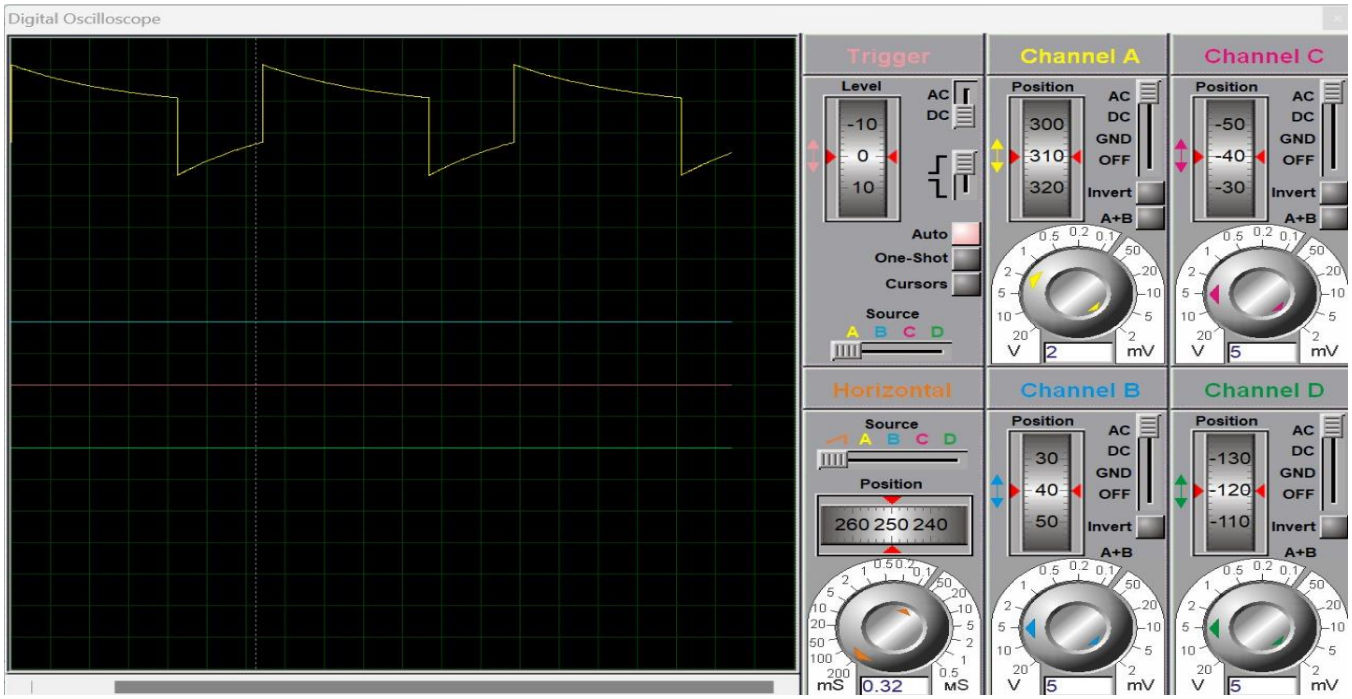

PCB Layout:

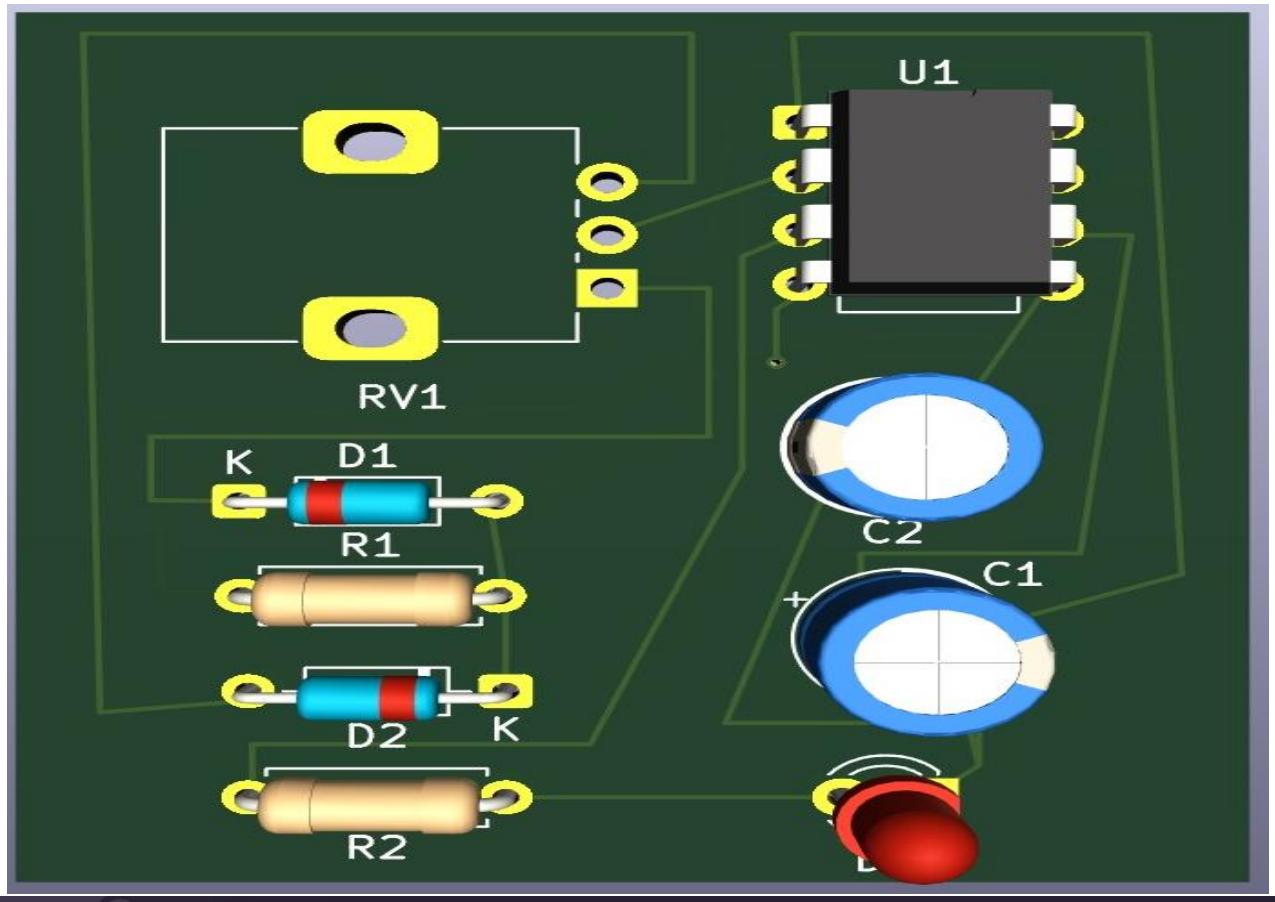
U1
RV1
K
D1
R1
C2
C1
D2
K
R2

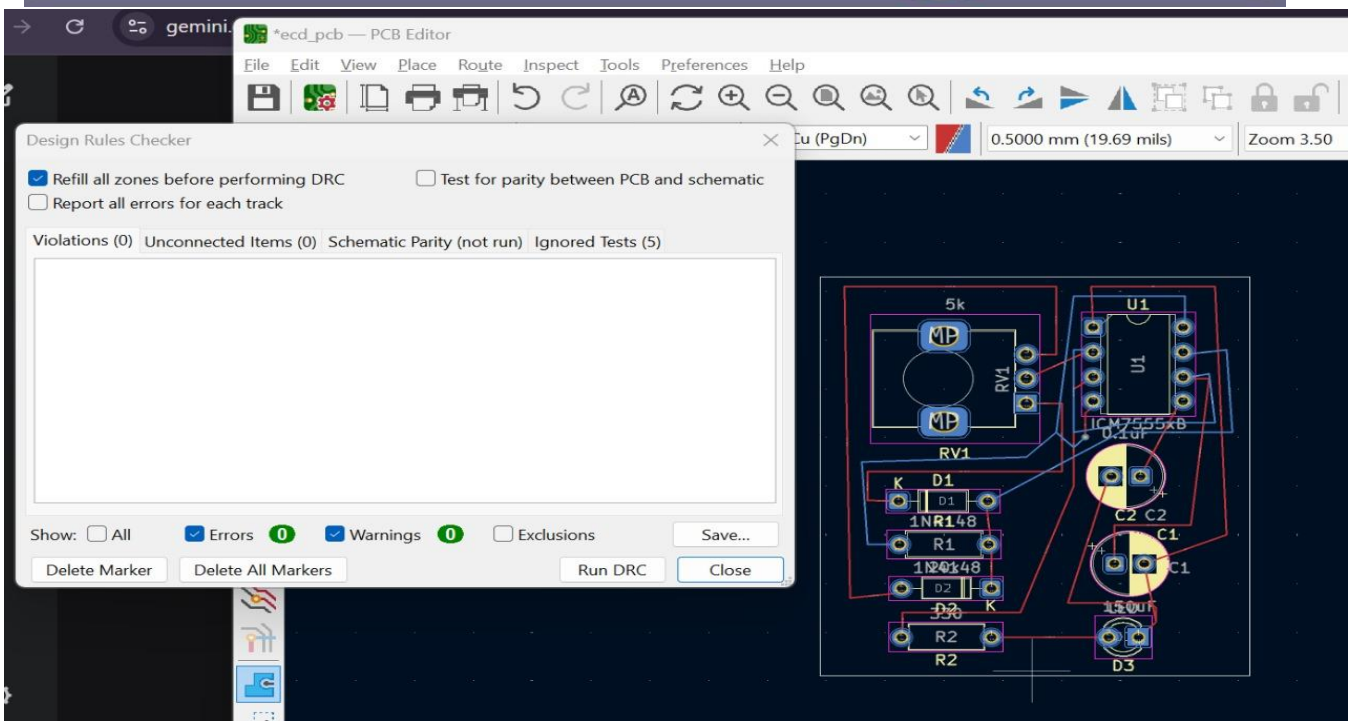
*ecd_pcb — PCB Editor
File Edit View Place Route Inspect Tools Preferences Help
0.5000 mm (19.69 mils)
Zoom 3.50
Design Rules Checker
Refill all zones before performing DRC
Test for parity between PCB and schematic
Report all errors for each track
Violations (0) Unconnected Items (0) Schematic Parity (not run) Ignored Tests (5)
Show: All Errors 0 Warnings 0 Exclusions
Save...
Delete Marker
Delete All Markers
Run DRC
Close
5k
U1
RV1
D1
R1
R2
C2
C1
D3
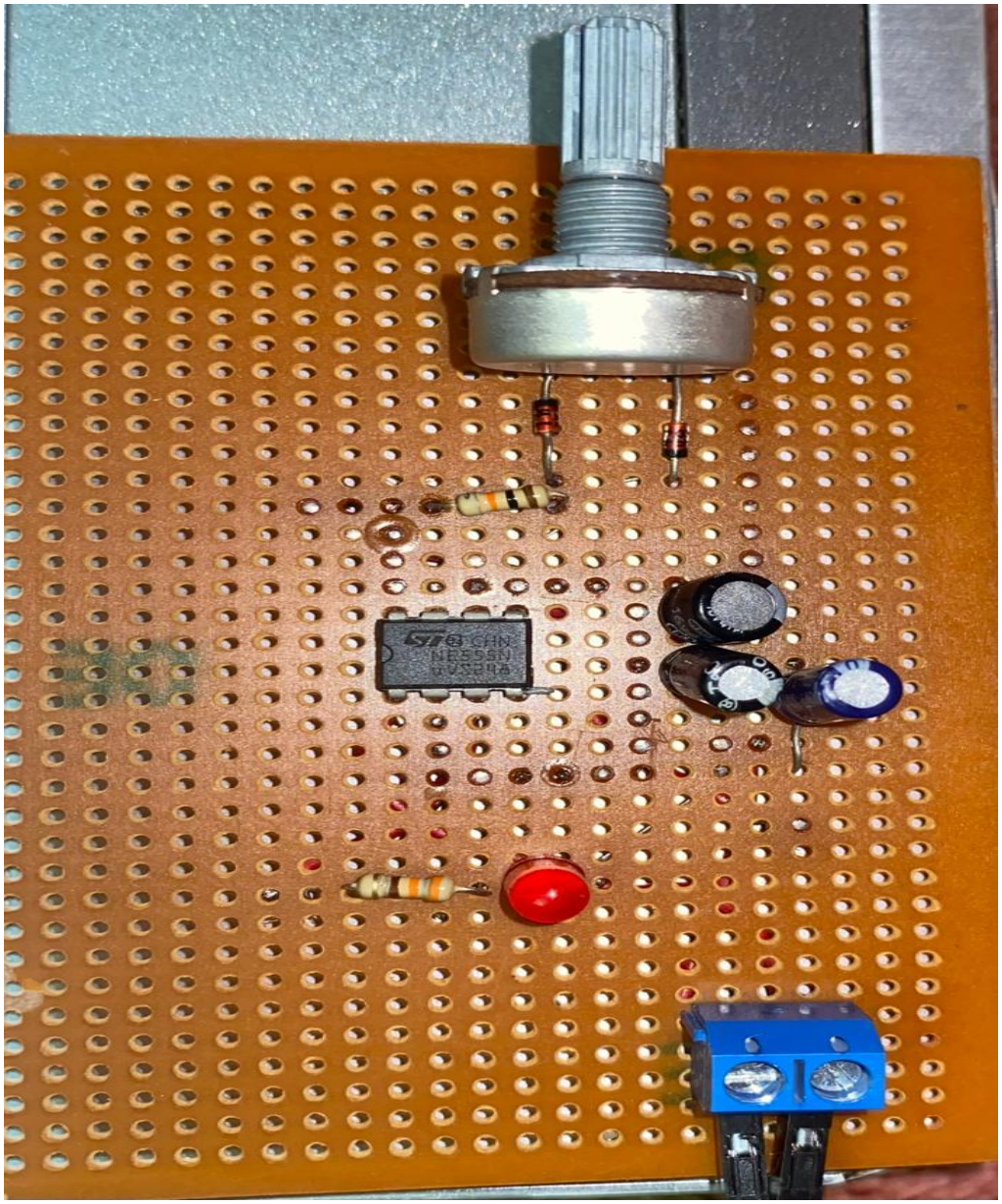
Vero Board Assembly: